C-17201

ITEM	DESCRIPTION	DETAIL	REQUIRED FXD.	REQUIRED FLT.
1	HOUSING HL-226	C-17199	1	1
2	ENDCAP KL-226	C-17200	1	1
3	SPHERICAL ROLLER BEARING	22226/W-33	1	1
4	STABILIZING RING SR-26-0	A-10605	1	0
5	LOCKNUT AN-26	B-10417	1	1
6	LOCKWASHER W-26	~~~~~~	1	1
7	CAP BOLT HEX. HEAD	$\frac{5}{8}$-11 NC x $1\frac{3}{4}$ LONG	6	6
8	LOCKWASHER	$\frac{5}{8}$ SPLIT MED.	6	6
9	PIPE PLUG	$\frac{1}{4}$-18 NPT	1	1

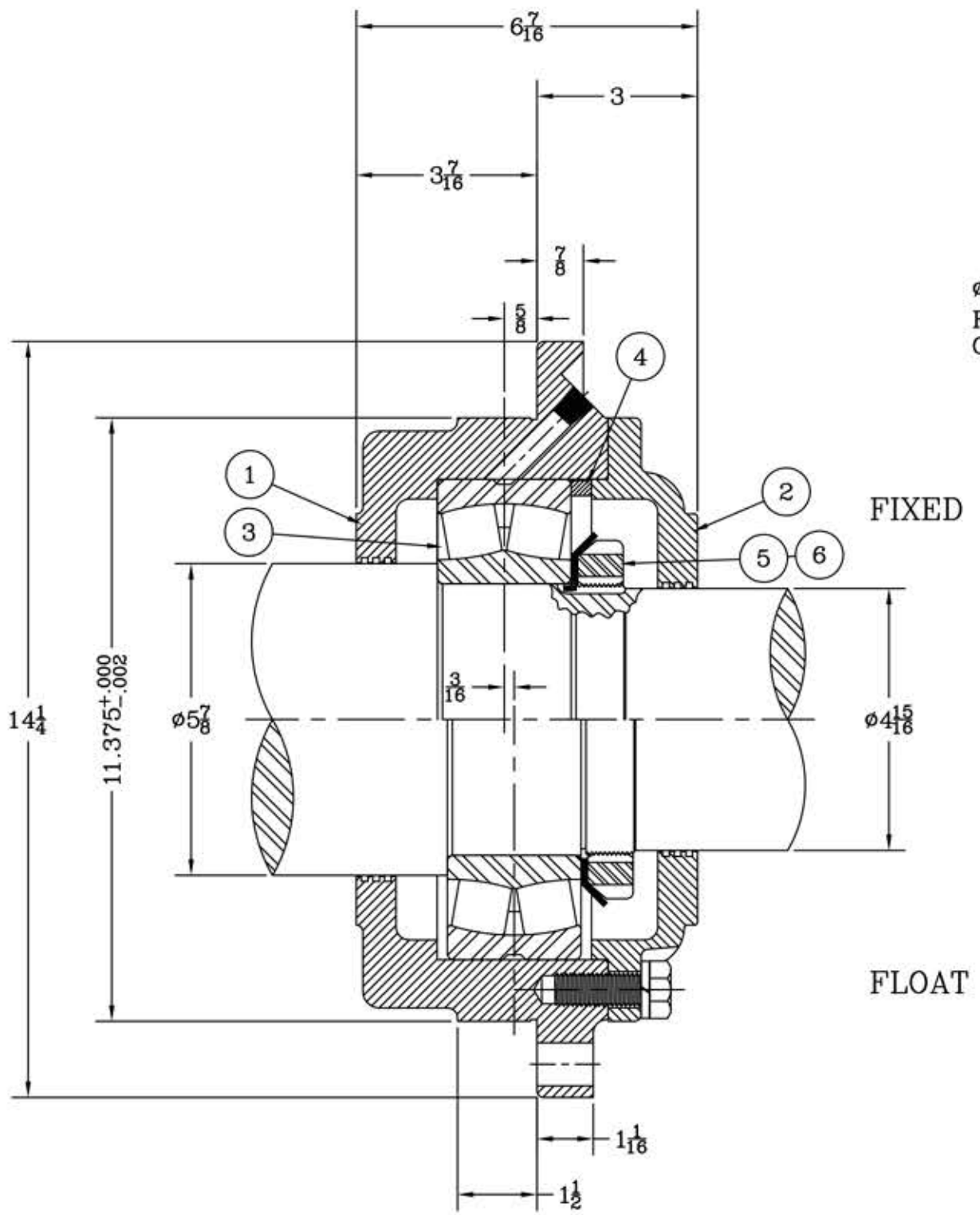

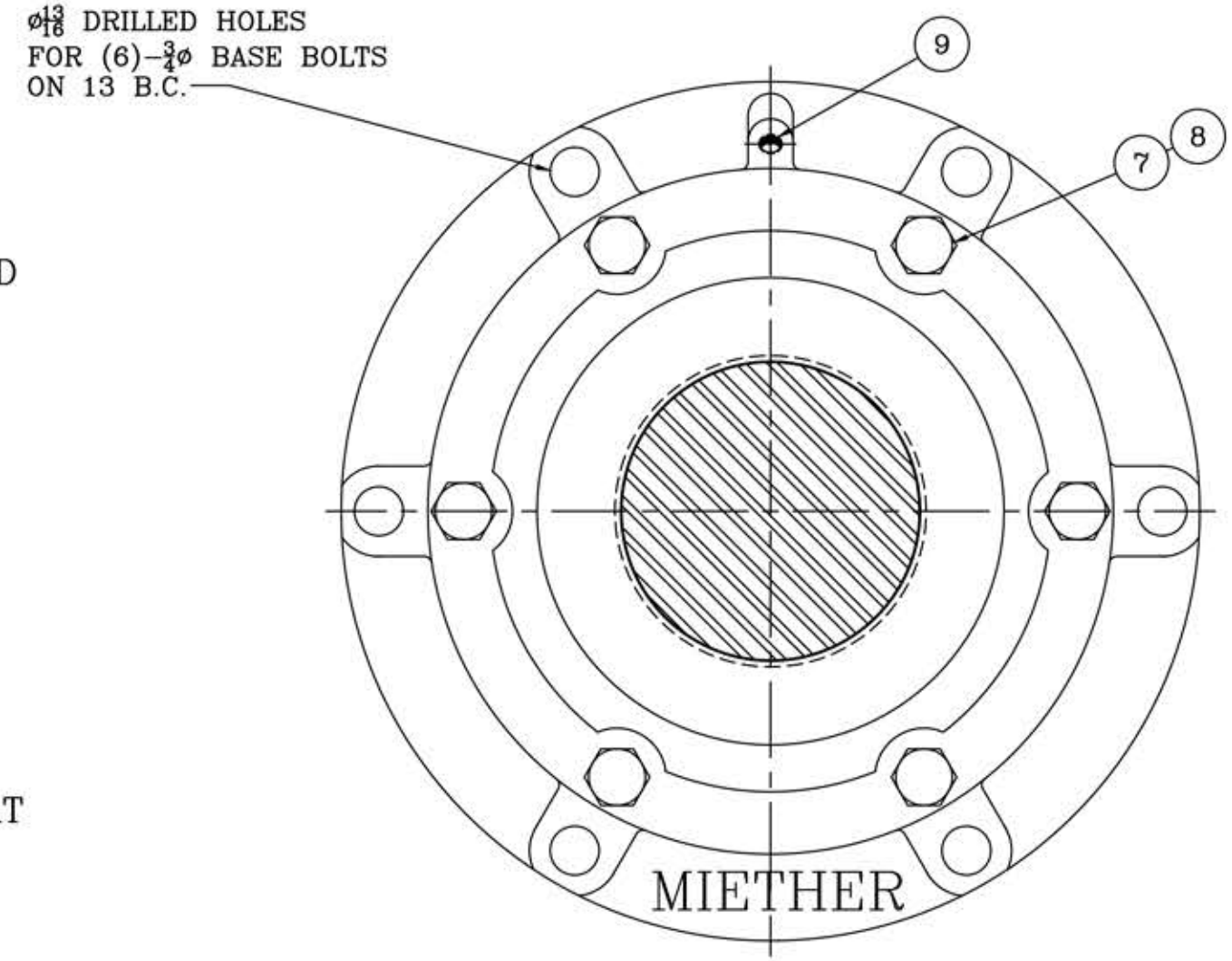

REDRAWN FOR CONFORMITY AR per KAB 2-23-04

REVISIONS

TOLERANCE: UNLESS OTHERWISE SPECIFIED
FRACTIONS +- 1/32" ANGLES +- 0° 30'
DECIMALS +- .005" WELD +- 1/16"
CASTING +- 1/16"
A.I.S.I. STANDARD FINISHES

SYMBOL	C	D	E	F	G	J	K
MICRO-INCH VALUE	16	32	63	125	250	500	1000

MIETHER BEARING PRODUCTS
AN ALCO INDUSTRIES COMPANY
ODESSA, TX. USA

FCL 22226 05-14 x 04-15
ASSEMBLY DRAWING

SCALE HALF	ASSEMBLY NO.
DRAWN JC	
DATE 12/27/76	DRAWING NO. C-17201
CHK:	

This drawing is the sole property of Miether Bearing Products and contains confidential and proprietary information. It is being provided to you for your use and may not be disclosed to any third party or used for any other purpose without Miether's prior written consent. The [materials] must be returned to the Company upon its demand. Your acceptance of these materials constitutes your acceptance of the foregoing terms.